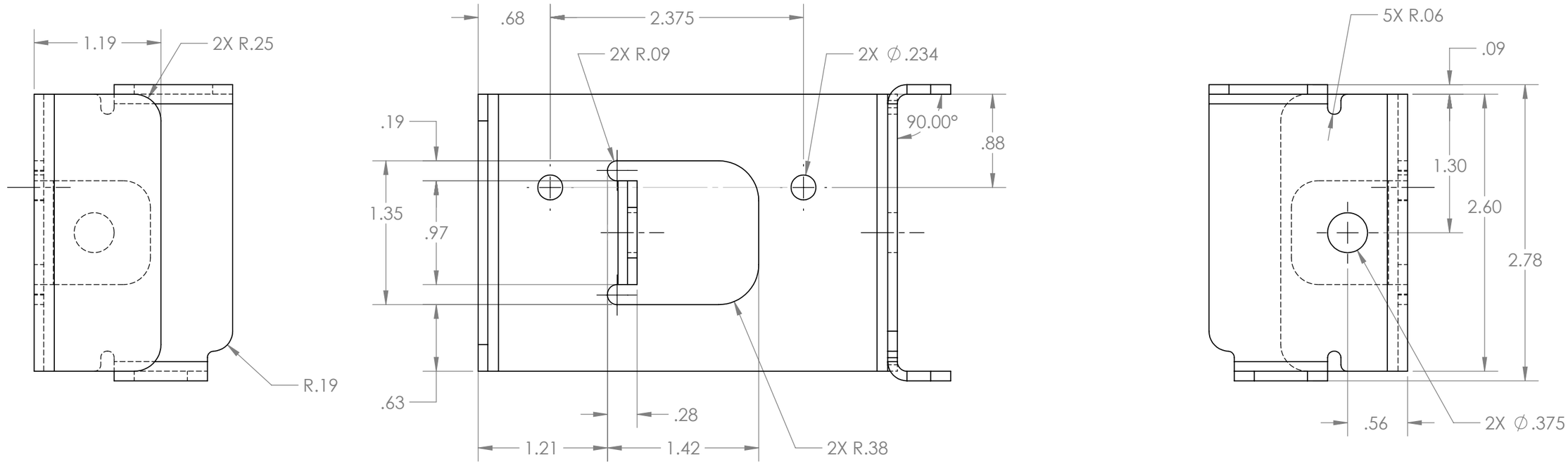

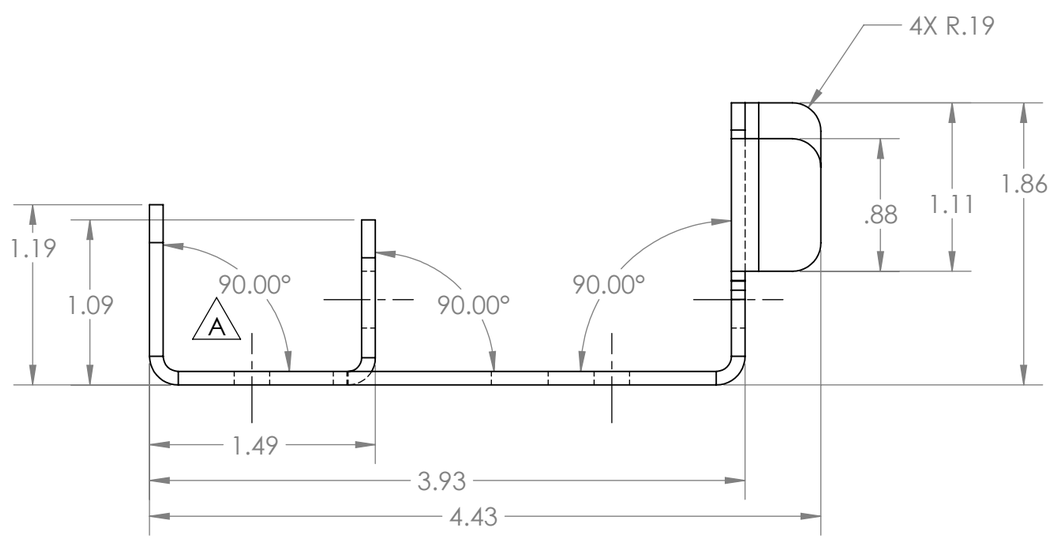

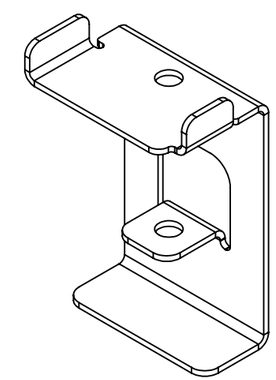

UNLESS OTHERWISE SPECIFIED:

DIMENSIONS ARE IN INCHES
TOLERANCES:
FRACTIONAL ± 1/32
ANGULAR: SHEET METAL BEND ± <1 DEGREE
.XX = ± .03
.XXX = ± .015
BREAK ALL SHARP EDGES AND CORNERS .020 MAX.

MATERIAL
13 GA CS

FINISH
WHITE POWDER COAT

	NAME	DATE
DRAWN	ECM	110923
CHECKED		
ENG APPR.		
MFG APPR.		
Q.A.		

COMMENTS:

TITLE:
BRACKET, WALL IV
AL-83215

SIZE B | DWG. NO. | REV A

SCALE: 1:2 | WEIGHT: | SHEET 1 OF 1

ALCO Sales & Service Co.

www.alcosales.com | 800-323-4282 | 630-655-1900 | info@alcosales.com